No. 79
(July 2003)
(Rev.1 July 2014)

~~Guidelines for Securing by Welding of Chain Cable Studs in Service~~ Guidance for Anchoring Equipment in Service

1. General

1.1 This document gives ~~the~~ guidelines for maximum wear down of anchor cable fittings, joining shackles, the looseness of studs within anchor cable and the securing by welding of studs found loose during survey of chain cables links in service.

2. Anchor Cable Fittings

2.1 Where considered necessary, joining shackles, D-shackles and other cable fittings should be gauged at their point of greatest weardown. Consideration should be given to replacement when the wear down equates to 12% loss of diameter over original.

2.2 When a Kenter joining shackle is opened, care should be taken to ensure that the tapered locking pin is in good condition. The steel securing pin is to be held in position by lead plugs, hammered in place to maintain a good fit.

2.3 In the case of swivel eyelet axle wear down, consideration should be given to replacement where the maximum lateral movement equates to 5% of the eyelet axle diameter.

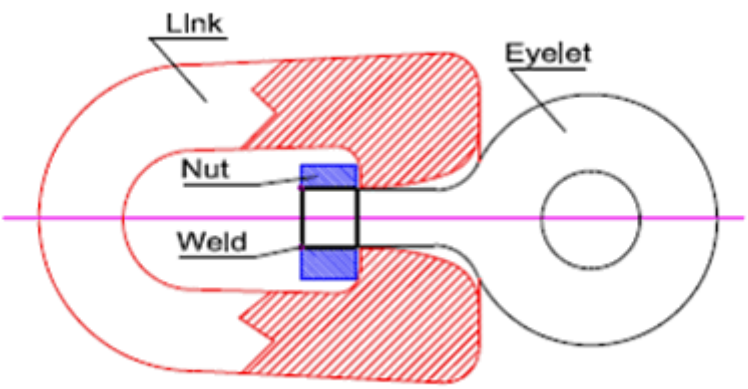

Figure 1: Swivel eyelet

3. Anchor Pin Weardown

3.1 All anchor pins should be closely examined for weardown. Where the weardown of the pin equates to 12% loss of diameter, consideration should be given to pin replacement.

3.2 Where the pin housing retains strength and if there is excessive clearance, consideration may be given to a sleeved connection between pin and housing in order to constrain the relative movement of pin and anchor.

No. 79 (cont)

4. The Looseness of Studs in Anchor Chain Cable

4.1 During the Special Survey Hull (SSH) when the anchor chains are ranged, gauged and examined, there should be no looseness of studs within links of the anchor cable. Where loose studs exist, the affected cable should be replaced, or where considered feasible, welded in accordance with the procedure specification below.

4.2 Loose studs in anchors cable found prior to the Special Survey may be permitted, subject to the following criteria:

Maximum Axial Stud movement – 3% of cable diameter

Maximum Lateral Stud movement – 5% of cable diameter

Maximum gap between Link and Stud – 3mm

4.3 Where studs are missing from the anchor cable, the lengths of affected cable should be replaced.

5. The Securing by Welding of Chain Cable Studs in Service

~~1.2~~5.1 Where it is proposed to secure loose anchor cable studs by welding, ~~T~~the proposal for repair is to be submitted to the Surveyor for evaluation and approval. The approval will be based on the conditions of the link to be repaired and of remaining links (see para. A1.6 Permissible Weardown of Stud Link Chain Cable for Bower Anchors in UR A1).

5.2 Any such repairs should be carried out in a clean environment as far as practicable. The attachment of earthing straps to cable links should be specially considered prior to welding.

~~2.~~6. Welding ~~p~~Procedure ~~s~~Specification

~~2~~6.1 Welds are to be made in accordance with a qualified and approved welding procedure and accepted ~~approved~~ by the Surveyor.

~~2~~6.2 Welding consumables used are to be approved with grading 3 or 3Y. For Grades 1 and 2 chain cables consumables should have low hydrogen grading H15 or better and for Grade 3 chain cables a very low hydrogen grading of H5 or better.

~~2~~6.3 A preheating temperature suitable to limit hardness and to prevent the risk of cold cracks is to be applied. In general the following applies:

- Grade 1 and 2: 100°C
- Grade 3: 175°C

~~2~~6.4 The welding practice and the welding parameters are to be selected to permit a large single weld deposit to be made. A temper bead at the stud side is allowed and may be advisable depending on the link grade.

~~2~~6.5 After welding, links should be wrapped to allow a slow cooling.

No. 79 (cont)

~~3.~~7. Welding ~~p~~Procedure ~~a~~Approval ~~t~~Tests

~~3~~7.1 The approval test procedure should be representative of the actual welding conditions. The scope of testing of the test sample should include macrosection test specimens and hardness measurements.

~~3~~7.2 The hardness of the weld metal and of the heat affected zone should not exceed:

- 380 Hv10 for Grade 1 and Grade 2 chain cables and for Grade 3 chain cables in the normalized and normalized and tempered conditions.

- 420 Hv10 for Grade 3 chain cables in the quenched and tempered condition.

~~4.~~8. Repair ~~p~~Procedure

~~4~~8.1 The abutting surfaces of the link and stud to be welded are to be ground to produce a good fit with an acceptable root gap to prevent cracking. The surfaces are to be free from moisture, grease, rust etc., just prior to welding.

~~4~~8.2 Magnetic particle examination to check that the link is free from cracks is to be performed before welding at Surveyor satisfaction.

~~4~~8.3 Welding is to be performed by qualified welders.

~~4~~8.4 Welding consumables are to be dried adequately prior to welding in accordance with manufacturer’s recommendation.

~~4~~8.5 In general the stud should be welded at the end opposite to the flash butt weld of the link and it should be welded completely around the circumference.

~~4~~8.6 All weld stop-starts shall be grounded to remove any defects and to blend smoothly with the base material.

~~5.~~9. Examination

~~5~~9.1 All welds are to be subjected to visual and magnetic or liquid particle examination. In the case of Grade 3 chain cables, inspection is recommended to be delayed for at least 48 hours after the weld has cooled to ambient temperature.

~~5~~9.2 Studs should be located in the links centrally and at right angles to the sides of the link.

No. 79 (cont)

Annex

Anchor and Anchor Chain Terminology

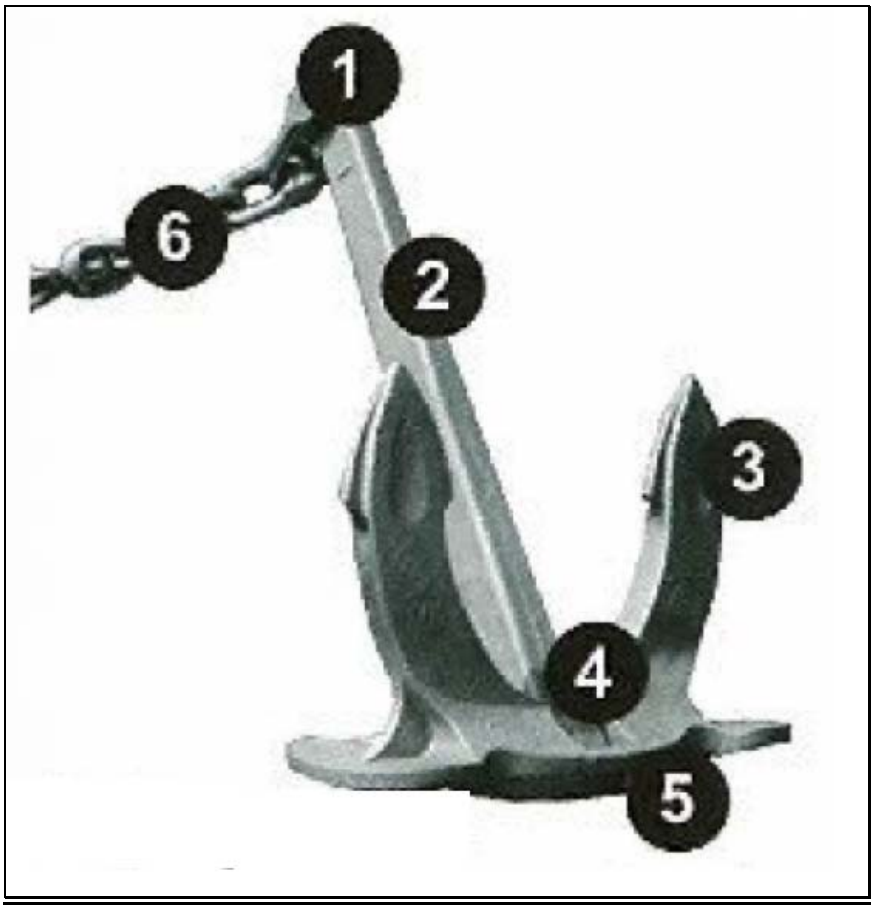

1. Crown / Shackle

2. Shank

3. Flukes

4. Crown pin

5. Crown plate

6. Anchor chain with swivel

No. 79 (cont)

Fore Runner (End Length or Guy Pendant) Terminology

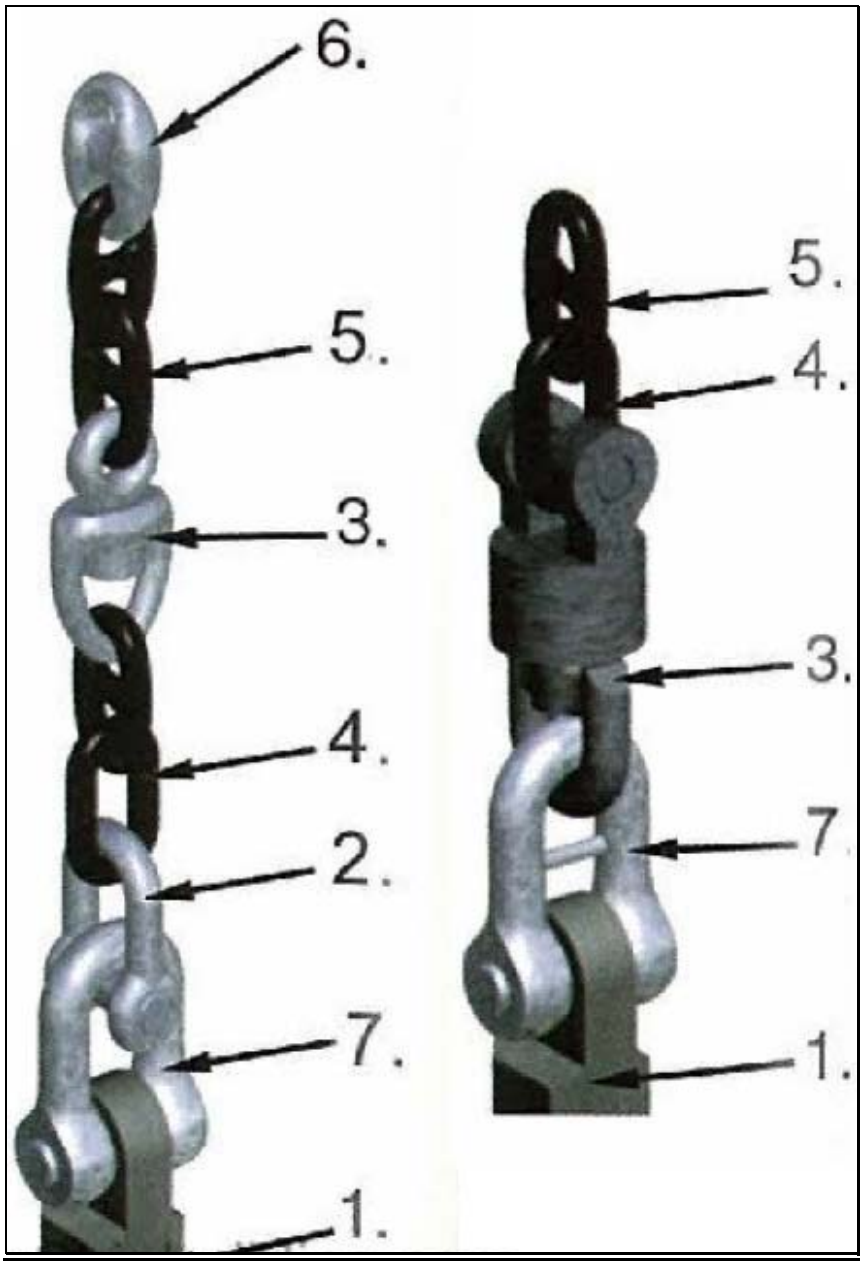

1. Anchor shank

2. Link shackle

3. Swivel

4. Open link

5. Enlarged link

6. Kenter shackle

7. Anchor shackle (Crown shackle)

No. 79 (cont)

Anchor Chain Links
Typical Design of Anchor Chain Links

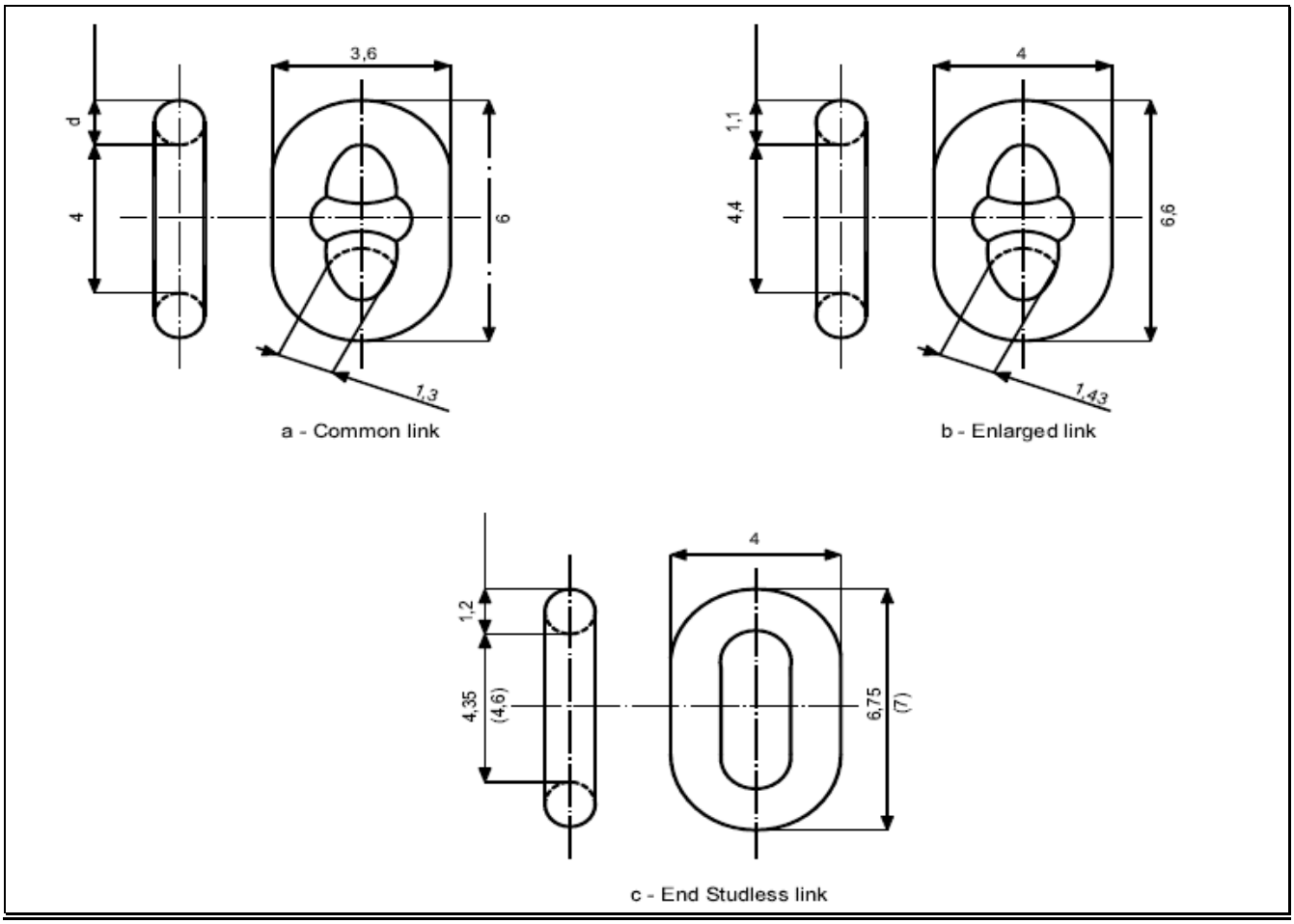

Note:

All dimensions are shown as multiples of the nominal diameter d of the common link. The dimensions in brackets may be chosen for end studless links in outboard end swivel pieces.

No. 79 (cont)

Anchor Chain Link and Shackles
Typical Measurements

1) Anchor chain calibration – location of the chain link measurements and wearing limits

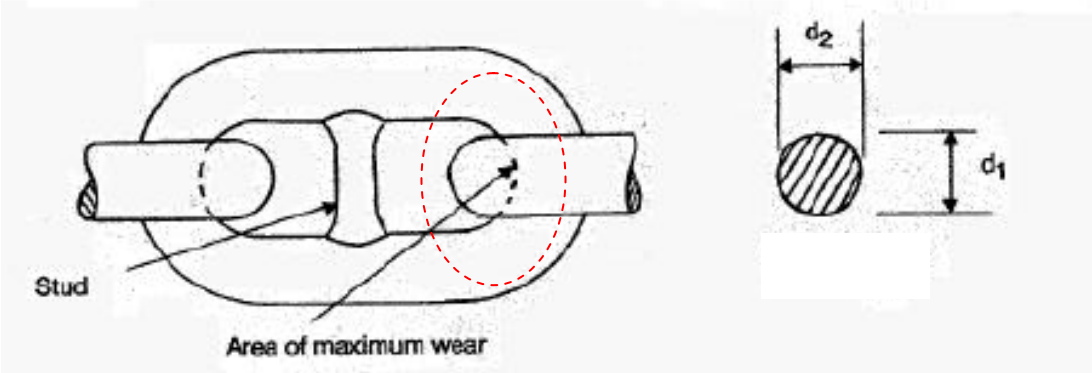

D_1 = average of measured diameter (mm) = $(d_1 + d_2)/2$
d_1 and **d_2** measured diameters of the chain link in the area of maximum wear
$D_1 \geq 0{,}88\ D_O$
D_O = original diameter (mm)

2) Loose stud of anchor chain links location of the measurements

a) Maximum lateral stud movements

≤ 0,05 D_o where **D_O** = original diameter (mm)

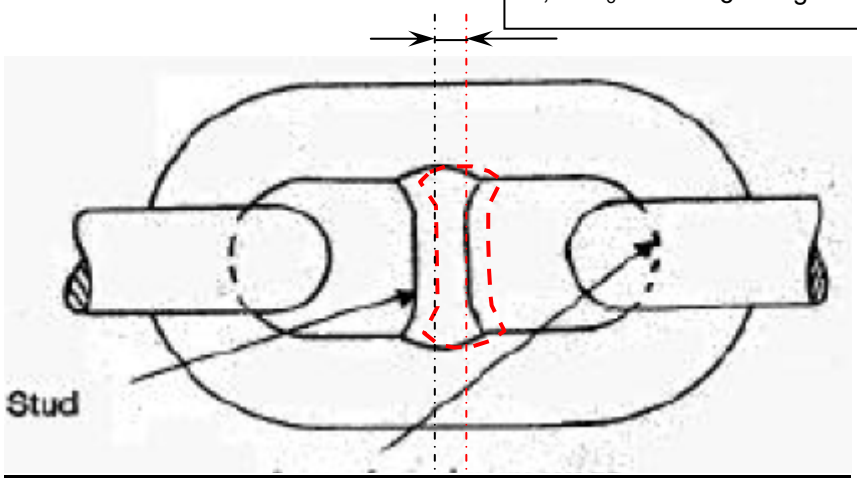

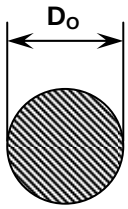

D_O = original diameter (mm)

No. 79 (cont)

b) Maximum axial stud movements

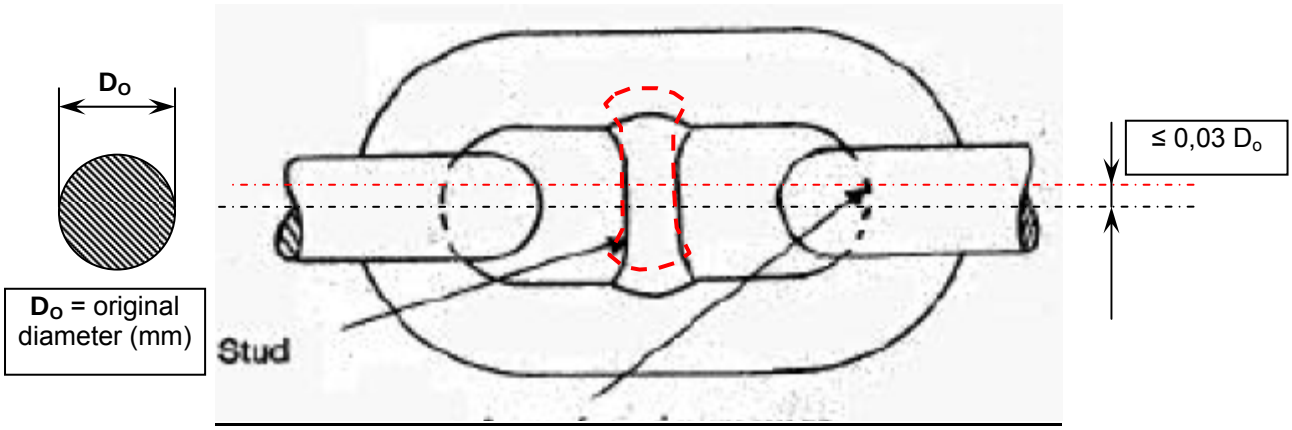

c) Maximum gap between Link and Stud

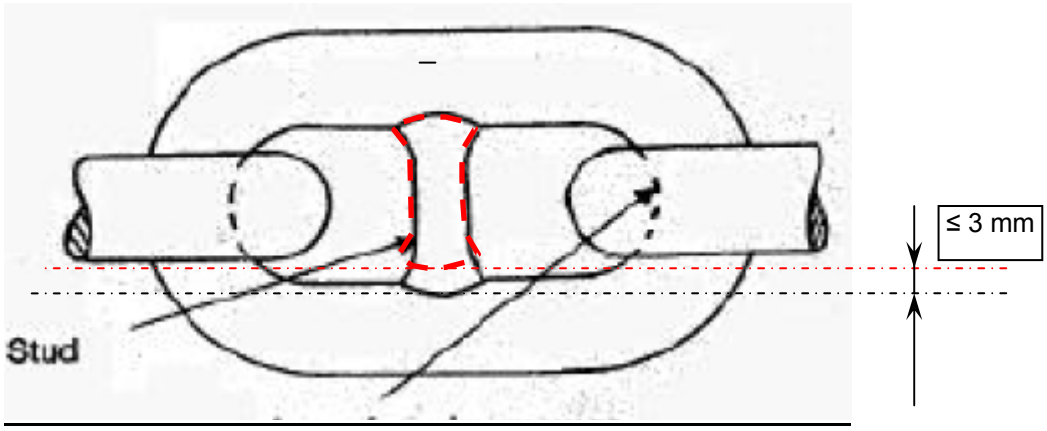

No. 79 (cont)

3) Joining shackle

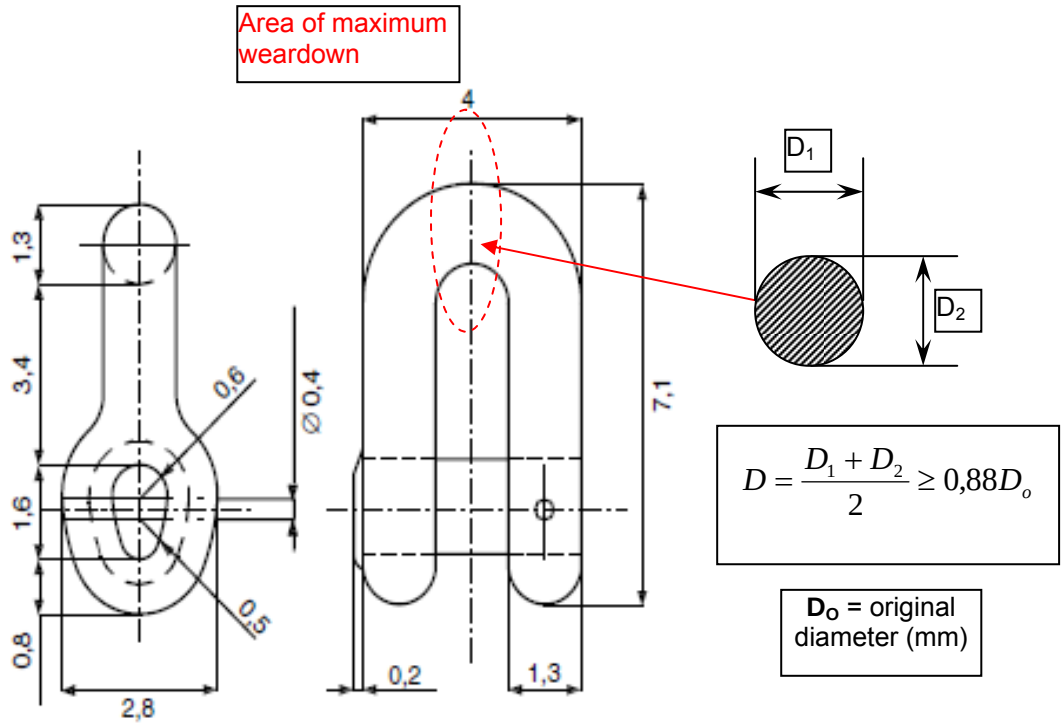

$$D = \frac{D_1 + D_2}{2} \geq 0{,}88 D_o$$

D_O = original diameter (mm)

4) End shackle

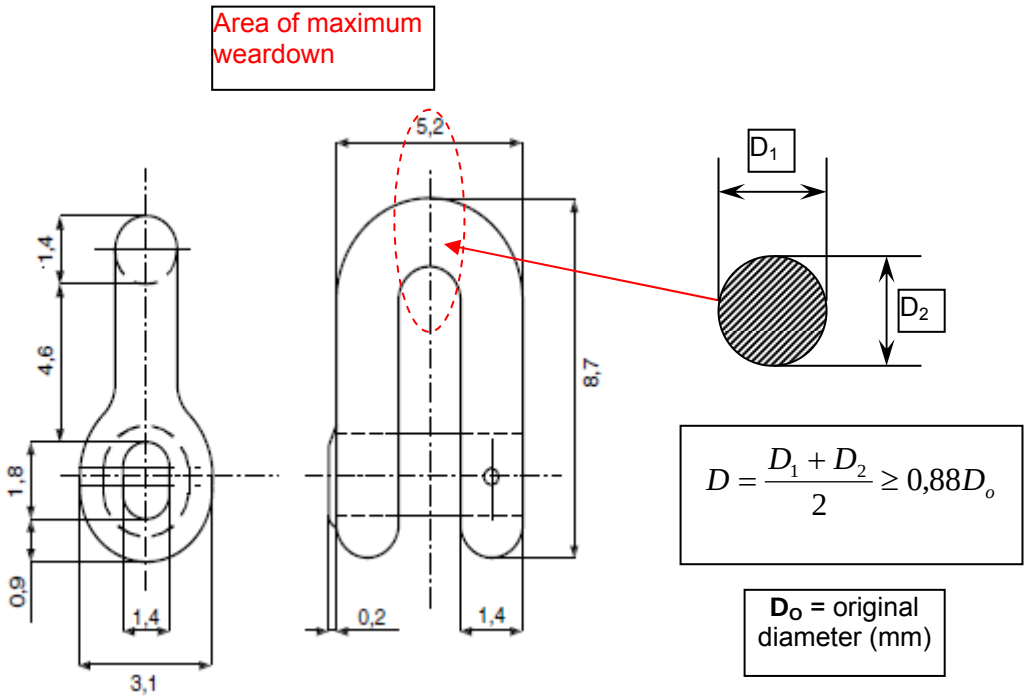

$$D = \frac{D_1 + D_2}{2} \geq 0{,}88 D_o$$

D_O = original diameter (mm)

No. 79 (cont)

5) Swivel

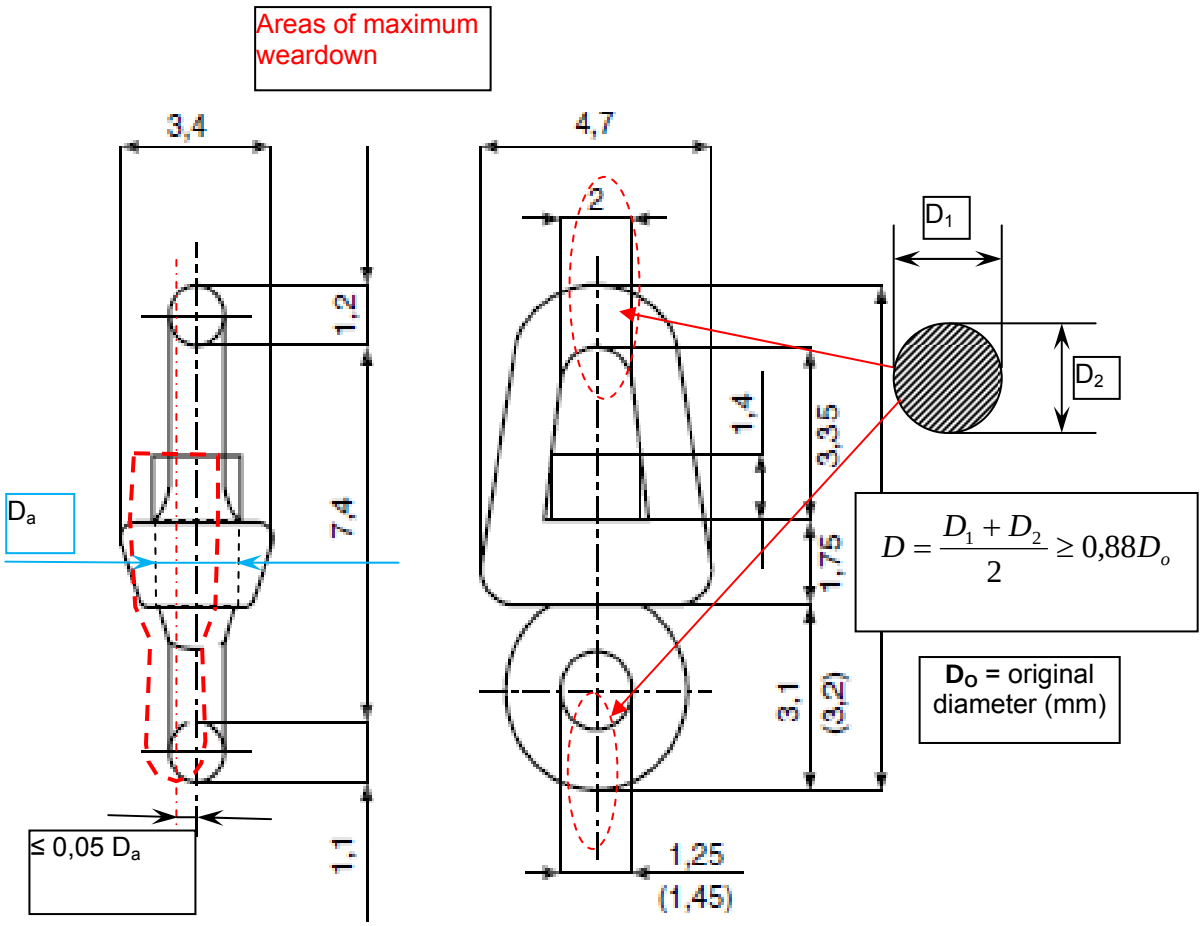

End of Document